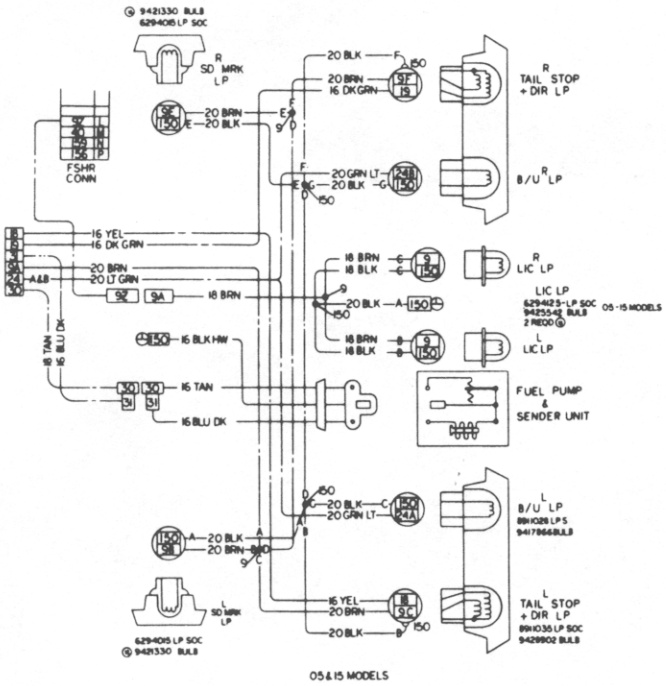

Wiring Diagram - Body and rear lighting (station wagon and panel delivery van) - 1974 models (see pages 209/210 for 'Electrical Circuit Identification')

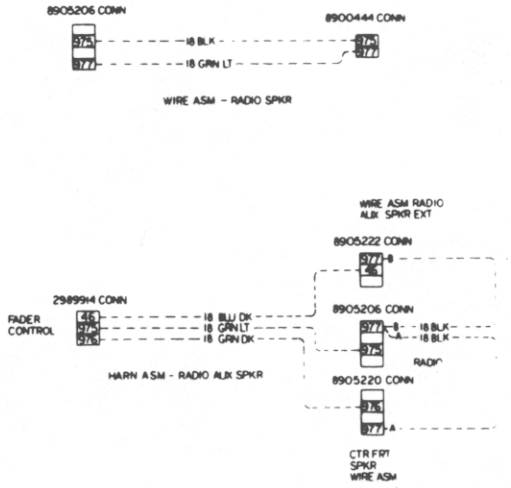

Wiring Diagram - Radio - 1974 models (see pages 209/210 for 'Electrical Circuit Identification')

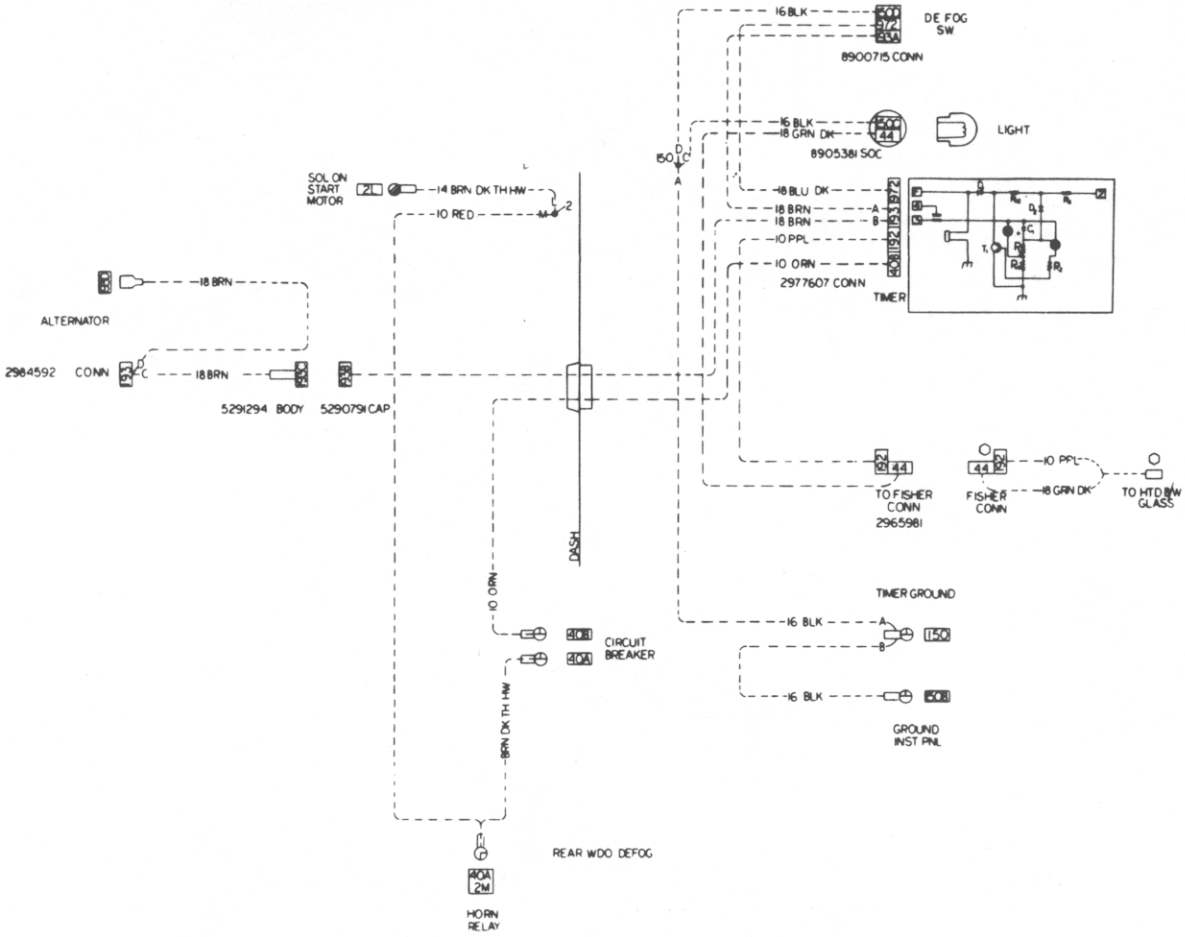

Wiring Diagram - Rear window defogger - 1974 models (see pages 209/210 for 'Electrical Circuit Identification')